Current part is item (4) on diagram. Available at www.oshkoshequipment.com

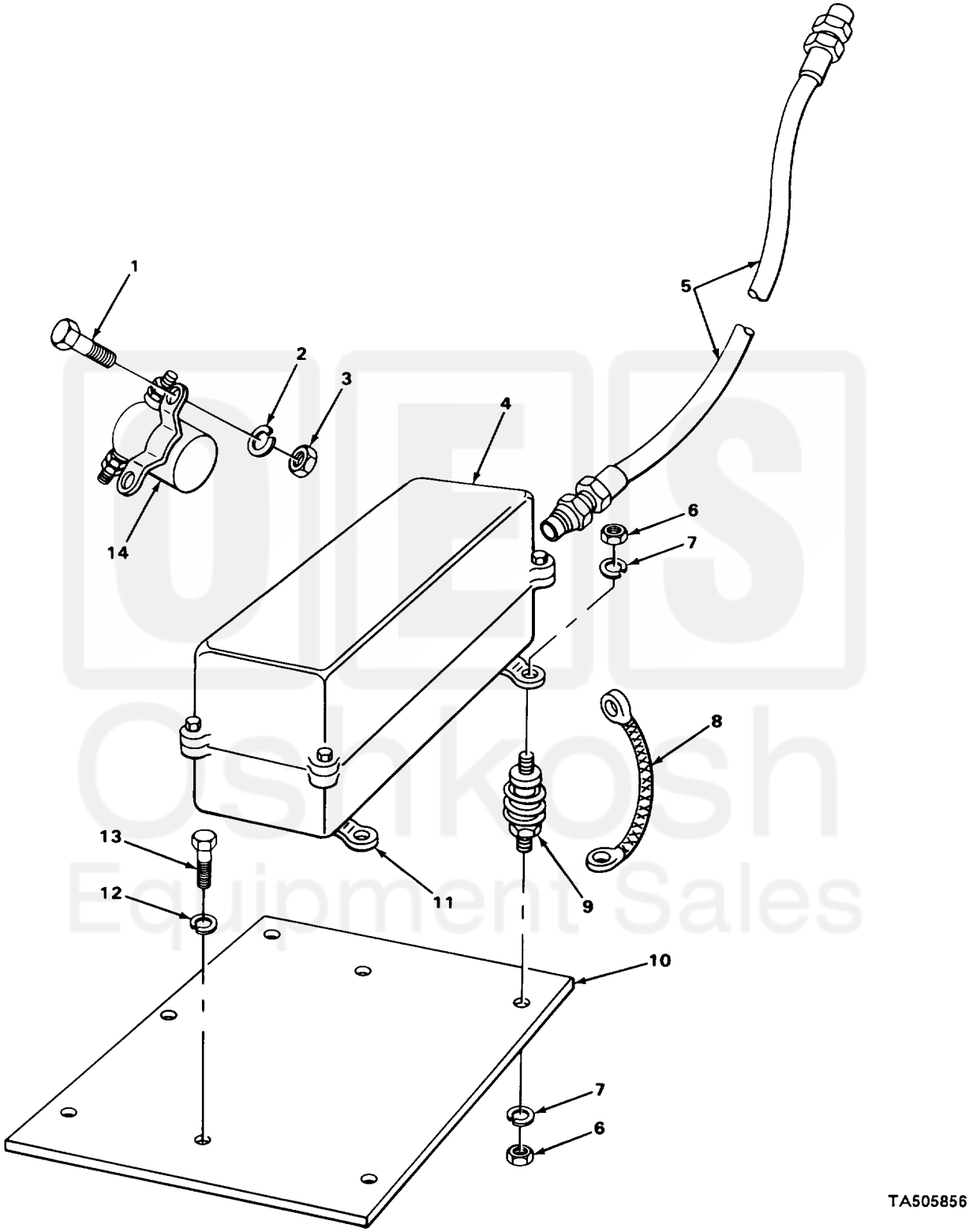

FIGURE 31. VOLTAGE REGULATOR.

Current part is item (4) on diagram. Available at www.oshkoshequipment.com

Current part is item (4) on diagram. Available at www.oshkoshequipment.com

(1) ITEM NO	(2) SMR CODE	(3) CAGEC	(4) PART NUMBER	(5) DESCRIPTION AND USABLE ON CODES (UOC)	(6) QTY
				GROUP 0602 GENERTOR REGULATOR	
				FIG. 31 VOLTAGE REGULATOR	
1	PFOZZ	96906	MS90728-8	SCREW,CAP,HEXAGON H HEAD,SWITCH MTG UOC:CHB,U76	2
2	PFOZZ	96906	MS35338-44	WASHER,LOCK SWITCH MTG UOC:CHB,U76	2
3	PFOZZ	96906	MS51967-2	NUT,PLAIN,HEXAGON SWITCH MTG UOC:CHB,U76	2
4	PAOFF	19207	11631857	REGULATOR,ENGINE GE 25 AMP	1
5	PAOZZ	18179	JE4824GR65	CABLE ASSY REGULATOR TO GENERATOR	1
6	PFOZZ	96906	MS51967-5	NUT,PLAIN,HEXAGON REGULATOR MTG	4
7	PFOZZ	96906	MS35338-45	WASHER,LOCK REGULATOR MTG	4
8	PAOZZ	72582	5187908	LEAD,IGNITION,ENGIN REGULATOR	1
9	PAOZZ	72582	5179976	SPRING,HELICAL,EXTE REGTULATOR MTG	2
10	XDOZZ	46717	F10481	PLATE REGULATOR MTG	1
11	PAOZZ	16764	1919520	BRACKET,REGULATOR M	2
12	PFOZZ	96906	MS35338-48	WASHER,LOCK PLATE MTG	2
13	PFOZZ	96906	MS90728-108	SCREW,CAP,HEXAGON H PLATE MTG	2
14	PAOZZ	16764	1114536	RELAY,ELECTROMAGNET UOC:CHB,U76	1
				END OF FIGURE	

Current part is item (4) on diagram. Available at www.oshkoshequipment.com